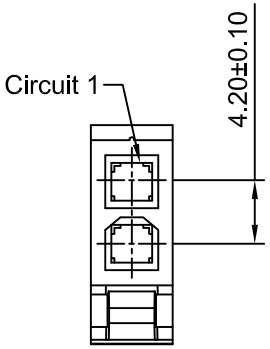

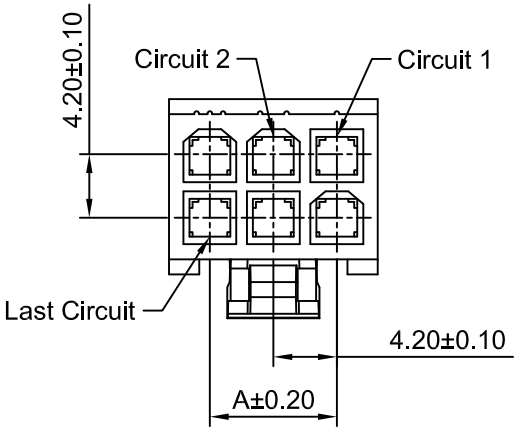

Ordering Information:

C4201HF-2xXP - *** - **
1 2 3

1.Part No.
2.Material:
(blank):Nylon 66 UL94V-2
V0:Nylon 66 UL94V-0
GWT:Nylon 66 UL94V-0,GWT 750°C
3.Color:
(blank):Natural
BK:Black
RD:Red
YL:Yellow
BL:Blue
GN:Green

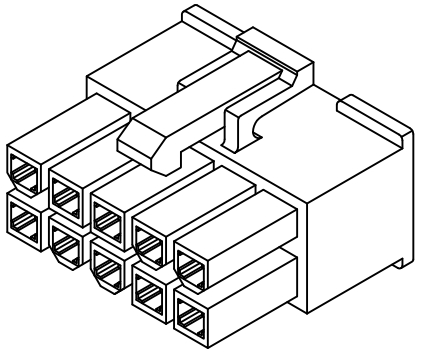

SPECIFICATIONS:
Current Rating: 9A AC,DC
Voltage Rating: 600V AC,DC
Temperature Range: -40°C ~ +105°C
Contact Resistance: 10mΩ Max
Insulation Resistance: 1000MΩ Min
Withstanding Voltage: 1500V AC/minute
Material: Nylon 66,UL94V-2(Natural)

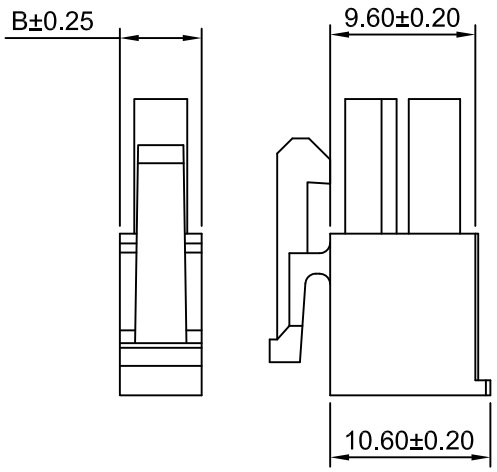

2x1P

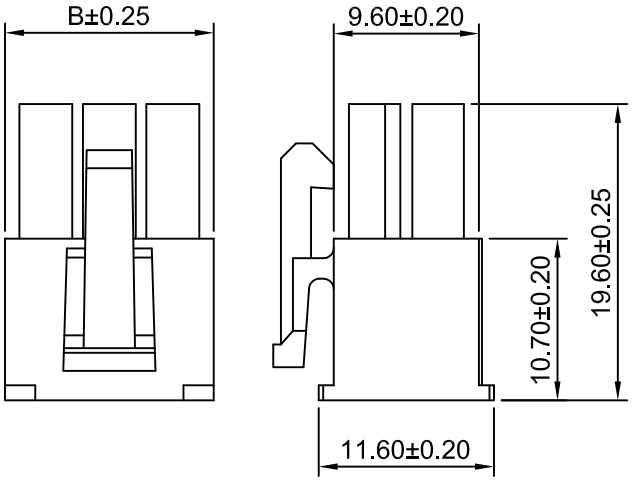

2x2P~2x12P

Ordering Information & Dimensions

Circuits	Dimensions(mm)		Circuits	Dimensions(mm)	
	A	B		A	B
2x1P	---	5.40	2x7P	25.20	30.60
2x2P	4.20	9.60	2x8P	29.40	34.80
2x3P	8.40	13.80	2x9P	33.60	39.00
2x4P	12.60	18.00	2x10P	37.80	43.20
2x5P	16.80	22.20	2x11P	42.00	47.40
2x6P	21.00	26.40	2x12P	46.20	51.60

Beijing Hongli Kunpeng International Trade Co.,Ltd.

Unit	Scale	Sheet
mm	2:1	1 of 1

Draw By: Diankui Wan
Approved : Jack Yin

Title : 4.20mm PITCH DUAL ROW HOUSING

REV	DESCRIPTION	DATE
A3	CHANGE THE SIZE & INFORMATION	2019.12.09
A2	Drawing revision	2016.06.08
A1	Change tolerance	2014.07.25

General Tolerance
x.x±0.25
x.xx±0.20
x.xxx±0.15

PROJECT

DRAW NO : HLB-01-HF-2xXP 79
REV A3