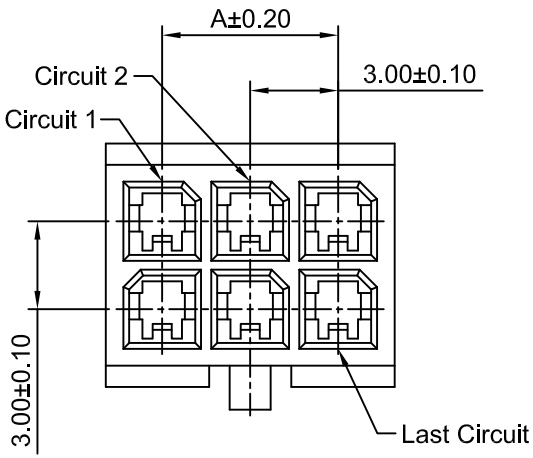

Ordering Information:

C3030HMC-2xXP - **
1 2

1.Part No.
2.Material:
(blank):Nylon 66 UL94V-0
GWT:Nylon 66 UL94V-0,GWT 750°C

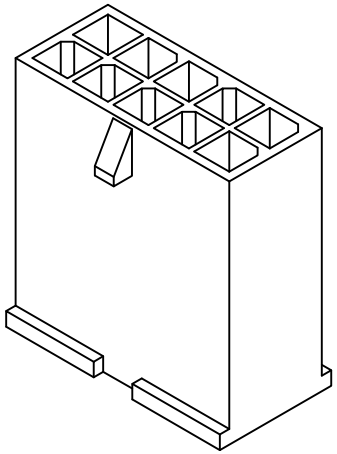

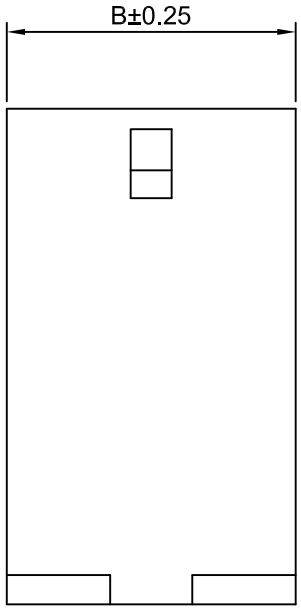

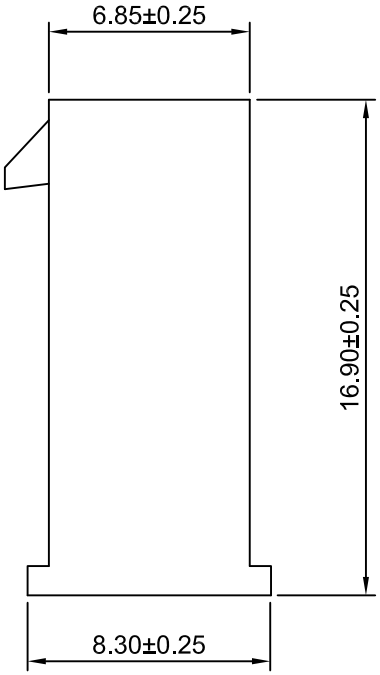

SPECIFICATIONS:

Current Rating: 12.5A AC,DC（AWG #18）
Voltage Rating: 600V AC,DC
Temperature Range: -40°C ~ +105°C
Contact Resistance: 10mΩ Max
Insulation Resistance: 1000MΩ Min
Withstanding Voltage: 1500V AC/minute
Material: Nylon 66,UL94V-0(Black)

Ordering Information & Dimensions

Circuits	Dimensions(mm)		Circuits	Dimensions(mm)	
	A	B		A	B
2x1P	----	3.85	2x7P	18.00	21.85
2x2P	3.00	6.85	2x8P	21.00	24.85
2x3P	6.00	9.85	2x9P	24.00	27.85
2x4P	9.00	12.85	2x10P	27.00	30.85
2x5P	12.00	15.85	2x11P	30.00	33.85
2x6P	15.00	18.85	2x12P	33.00	36.85

REV	DESCRIPTION	DATE
A2	CHANGE THE DRAWING	2022.01.14
A1	CHANGE THE Current Rating	2018.12.15
A0	NEW RELEASE	2011.06.02

Beijing Hongli Kunpeng International Trade Co.,Ltd.

Unit	Scale	Sheet	TITLE
mm	4:1	1 of 1	3.00mm PITCH
DRWN Xu Lei	CHK'D Diankui Wan	APPR Jack Yin	Dual Row HOUSING

General Tolerances
x.x±0.25
x.xx±0.20
x.xxx±0.15
ANGLES ±1°

THIRD ANGLE PROJECTION

DRAWING NO. HLB-30-HMC-2xXP 36

REV A2