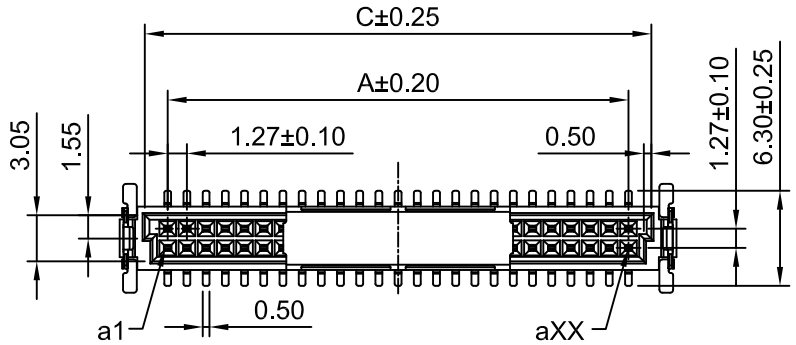

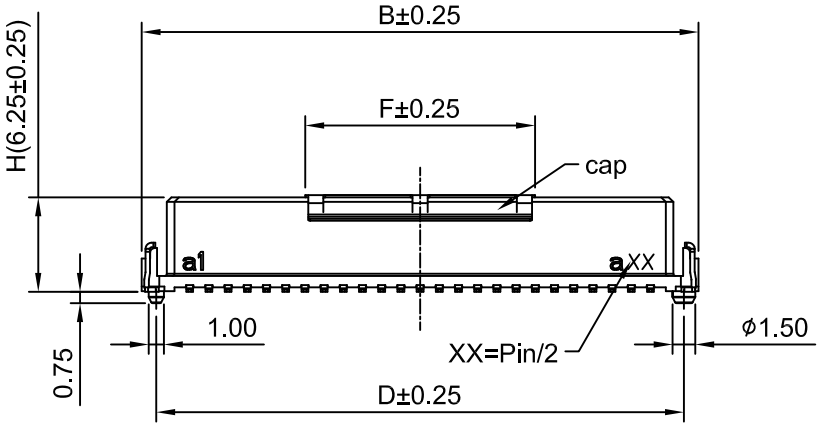

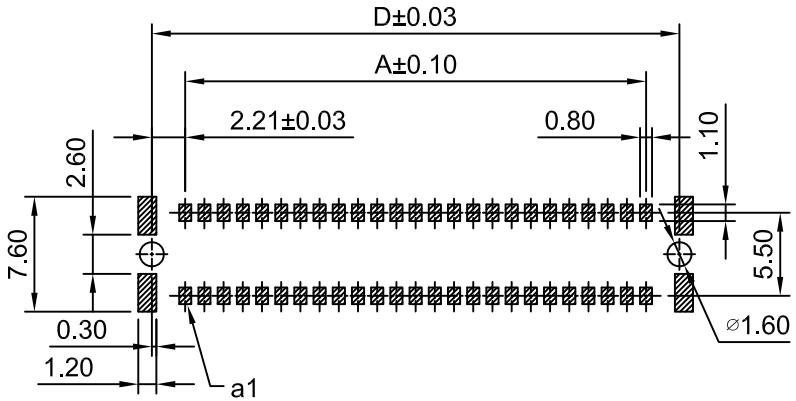

RECOMMENDED PCB LAYOUT(TOLERANCE:±0.05)

Ordering Information:

B1271HWV-S-F-2xXP - ** - ***
(1) (2) (3)

1.Part No.
2.Hight(Size H):
(blank): 6.25mm
H91: 9.05mm
H137: 13.65mm
3.Material:
(blank) - LCP,UL94V-0
GWT - LCP,UL94V-0,GWT 750℃

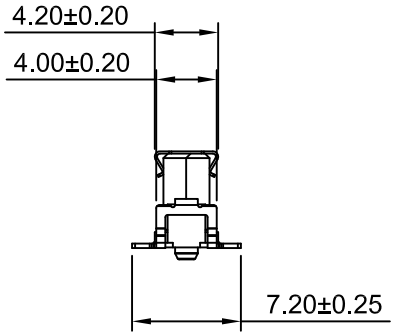

Mating Dimension

Hight (mm)	Mates With	Mating Hight
6.25	B1271WV-S-F-2xXP	8.00
	B1271WV-S-F-2xXP-H83	10.85
	B1271WV-S-F-2xXP-H99	15.40
9.05	B1271WV-S-F-2xXP	9.50
	B1271WV-S-F-2xXP-H83	12.30
	B1271WV-S-F-2xXP-H99	16.90
13.65	B1271WV-S-F-2xXP	11.10
	B1271WV-S-F-2xXP-H83	13.90
	B1271WV-S-F-2xXP-H99	18.50

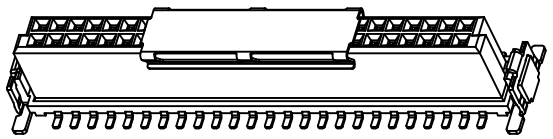

SPECIFICATIONS:

Current Rating: 0.5A(Min) AC,DC
Voltage Rating: 250V AC,DC
Temperature Range: -55°C ~ +125°C
Contact Resistance: 25mΩ Max.
Insulation Resistance: 10000MΩ Min.
Withstanding Voltage: 500V AC/minute
Data rate up to 3 Gbit/s
Durability: 500 Cycles.
Pin Material: Phosphor Bronze/Tin over Nickel
Mating Area: Phosphor Bronze/Gold over Nickel(Au:5u")
Solder Tabs: Phosphor Bronze/Tin over Nickel
Housing Material: LCP,UL94V-0(Black)

Ordering Information & Dimensions

Circuits	Dimensions(mm)				
	A	B	C	D	F
2x6P	6.35	12.70	9.57	10.77	5.60
2x8P	8.89	15.24	12.11	13.31	
2x10P	11.43	17.78	14.65	15.85	
2x13P	15.24	21.59	18.46	19.66	17.00
2x16P	19.05	25.40	22.27	23.47	
2x20P	24.13	30.48	27.35	28.55	
2x25P	30.48	36.83	33.70	34.90	
2x34P	41.91	48.26	45.13	46.33	
2x40P	49.53	55.88	52.75	53.95	

Beijing Hongli Kunpeng International Trade Co.,Ltd.

Unit	Scale	Sheet
mm	2:1	1 of 1
Draw By: Diankui Wan	Approved : Jack Yin	

Title : 1.27mm Pitch 180° Dual Row Wafer-SMT Type

REV	DESCRIPTION	DATE
A0	NEW RELEASE	2017.03.31

General Tolerance: x.x±0.25, x.xx±0.20, x.xxx±0.15

PROJECT

DRAW NO : HLB-71-WR-S-F-2xXP 3

REV A0