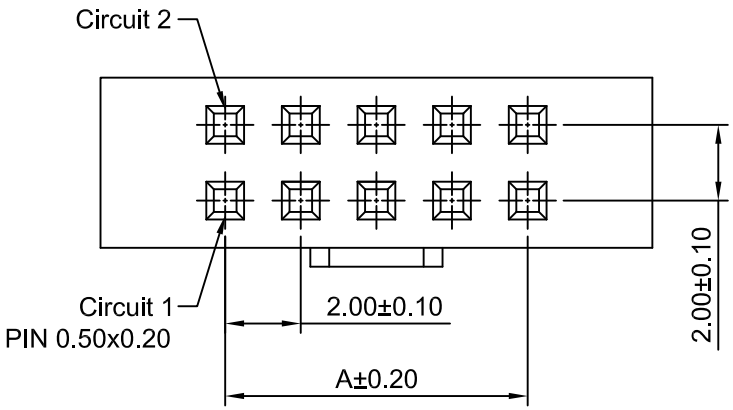

Ordering Information:

A2005HWVA-N-2xXP-W40 - *** - ***
1 2 3

1.Part No.
2.Material:
(blank) - PBT,UL94V-0
6T - Nylon 6T,UL94V-0
GWT - Nylon 6T,UL94V-0,GWT 750℃
3.Finish:
(blank) - Gold over Nickel
T - Tin over Nickel

SPECIFICATIONS:
Current Rating: 2A AC,DC
Voltage Rating: 250V AC,DC
Temperature Range: -40°C ~ +105°C
Contact Resistance: 20mΩ Max
Insulation Resistance: 1000MΩ Min
Withstanding Voltage: 500V AC/minute
Pin Material: Brass/Gold over Nickel
Material: PBT,UL94V-0(Black)

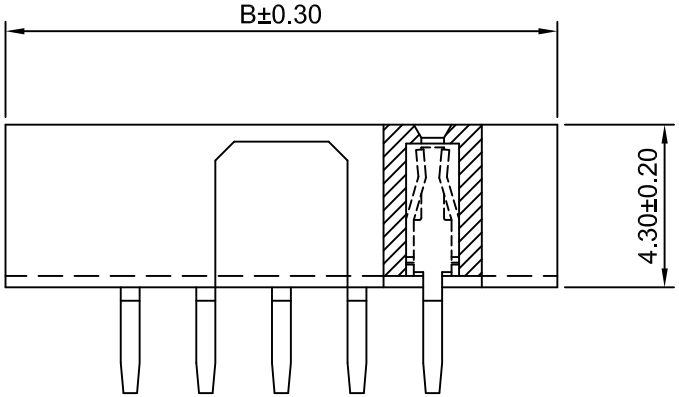

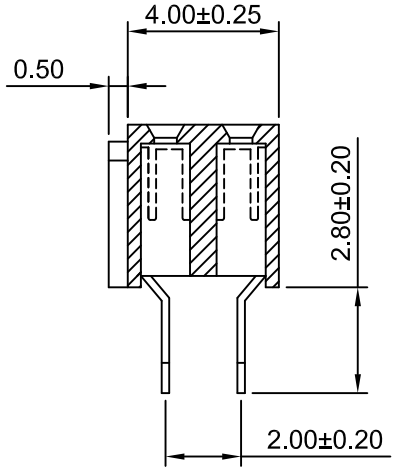

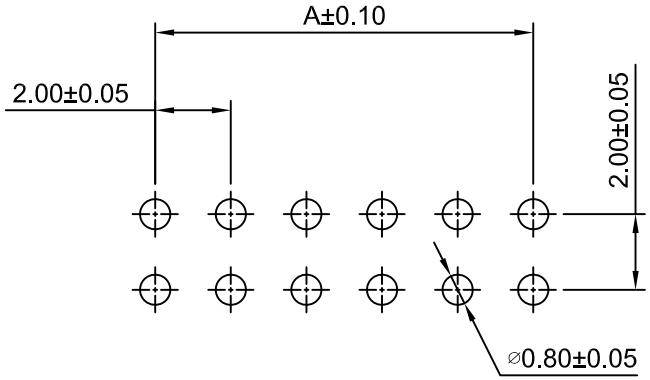

P C B LAYOUT

Ordering Information & Dimensions

Circuits	Dimensions (mm)		Circuits	Dimensions (mm)		Circuits	Dimensions (mm)	
	A	B		A	B		A	B
2x2P	2.00	8.50	2x15P	28.00	34.50	2x28P	54.00	60.50
2x3P	4.00	10.50	2x16P	30.00	36.50	2x29P	56.00	62.50
2x4P	6.00	12.50	2x17P	32.00	38.50	2x30P	58.00	64.50
2x5P	8.00	14.50	2x18P	34.00	40.50	2x31P	60.00	66.50
2x6P	10.00	16.50	2x19P	36.00	42.50	2x32P	62.00	68.50
2x7P	12.00	18.50	2x20P	38.00	44.50	2x33P	64.00	70.50
2x8P	14.00	20.50	2x21P	40.00	46.50	2x34P	66.00	72.50
2x9P	16.00	22.50	2x22P	42.00	48.50	2x35P	68.00	74.50
2x10P	18.00	24.50	2x23P	44.00	50.50	2x36P	70.00	76.50
2x11P	20.00	26.50	2x24P	46.00	52.50	2x37P	72.00	78.50
2x12P	22.00	28.50	2x25P	48.00	54.50	2x38P	74.00	80.50
2x13P	24.00	30.50	2x26P	50.00	56.50	2x39P	76.00	82.50
2x14P	26.00	32.50	2x27P	52.00	58.50	2x40P	78.00	84.50

Beijing Hongli Kunpeng International Trade Co.,Ltd.

Unit	Scale	Sheet
mm	5:1	1 of 1

Draw By: Diankui Wan
Approved : Jack Yin

Title : 2.00mm Pitch 180° Dual Row Female Header

REV	DESCRIPTION	DATE
A1	ADD THE SIZE	2019.07.03
A0	NEW RELEASE	2017.10.27

General Tolerance
x.x±0.25
x.xx±0.20
x.xxx±0.15

PROJECT

DRAW NO : HLB-05-HWVA-N-2xXP-W40 42
REV A1