Beijing Hongli Kunpeng International Trade Co., LTD

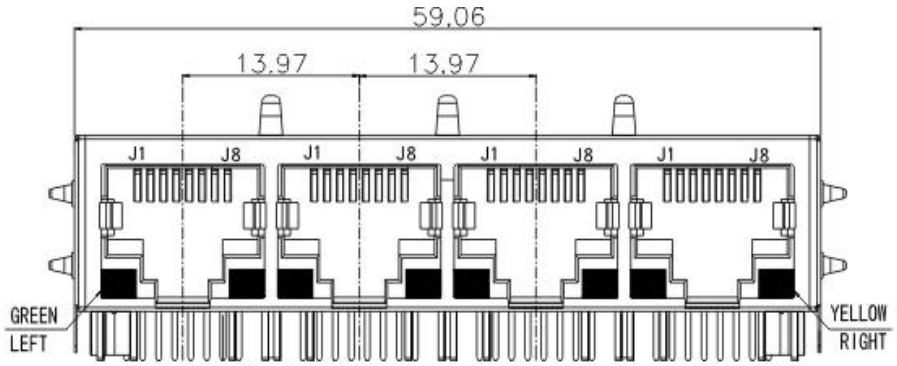

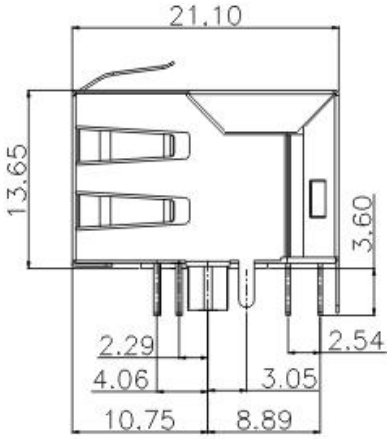

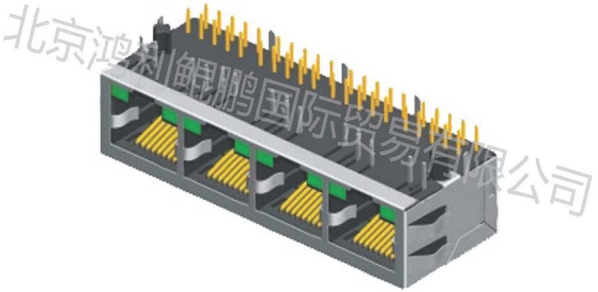

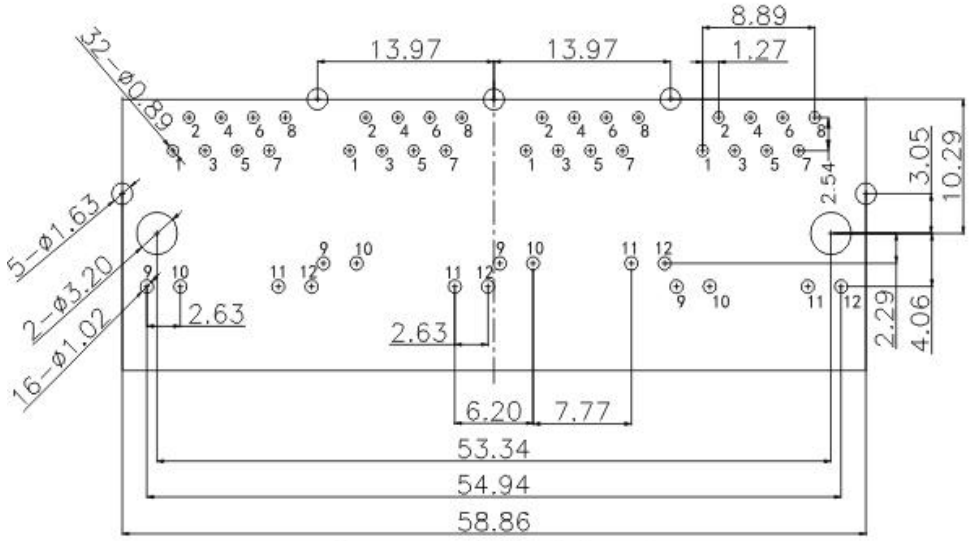

Recommended PCB Layout
(PCB TOLERANCE±0.05)

1X4 Port,TAB-Down(21.1), R/A Type

Current Rating : 1.5 Ampere

Insulation Resistance : 1000 MΩ Min

Dielectric Withstanding : 1500 V

Contact Resistance :30 mΩ Max

Mating Force : 30N Max

Unmating Force: 50N Min

Durability : 750 Cycles